Sweetpotato Starch to Fermentable Sugars

Linda Bruner, Kathy Fraley, and Megan Maltais

Advisor: Dr. Steven Peretti

Department of Chemical and Biomolecular Engineering

North Carolina State University

NC STATE UNIVERSITY

Goals

- Complete preliminary design of upstream process
- Complete base case model of process
- Equipment evaluation
- Process economics
- Pilot plant layout
- Provide recommendations

Motivation

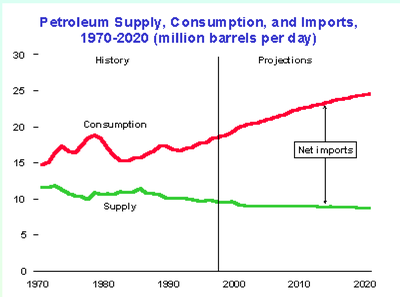

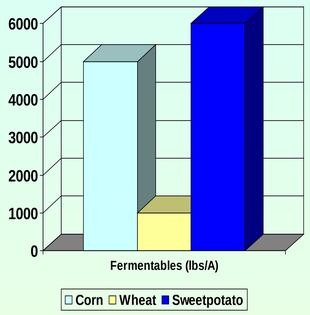

Process Background

Feed: 65 lbs per batch (66% water, 2% starch, 2% impurities)

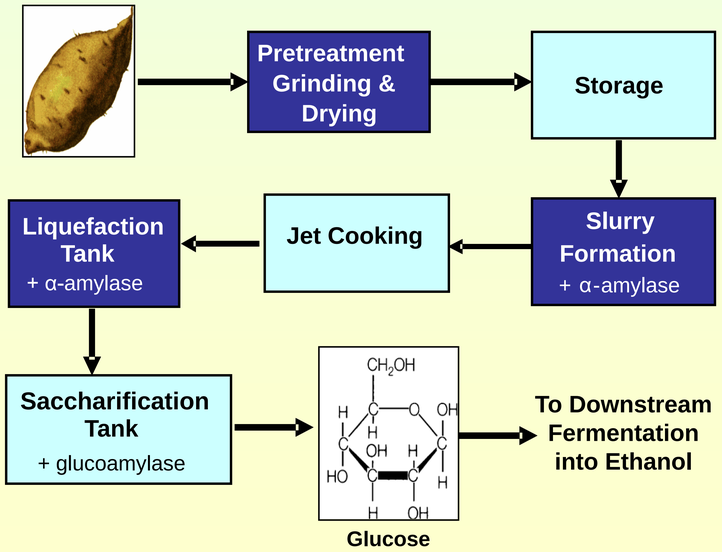

Upstream Product:19.98 lbs glucose per batch (95% conversion)
Overall Product:2.84 gallons of ethanol per batch

Simulation: Base Case Model

Overall Simulated Starch to Glucose Reaction:

Starch (162g/mol) + Water (18g/mol) → Glucose (180g/mol)

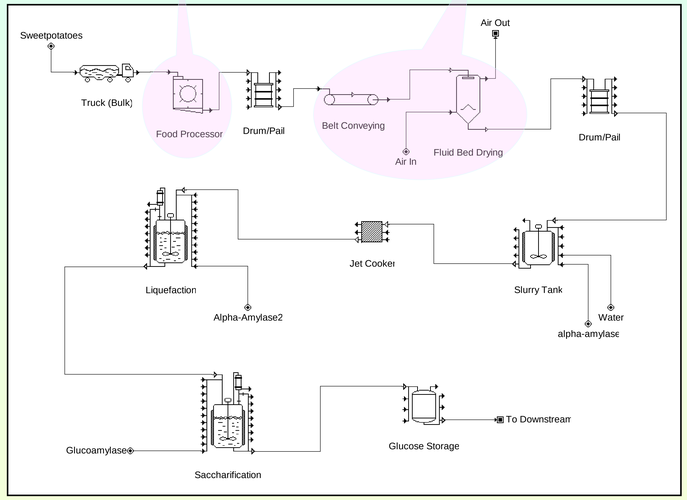

Vessel	Process Time (hours)	Temp. (°C)	Extent of Reaction
Storage Tank		15.56	
Chopper		25	
Drier		70	
Hammer Mill		25	
Slurry Tank	0.25	80	
Jet Cooker	0.083	105	5%
Liquefaction	1	80	5%
Saccharification	5	60	85%
Overall	**6.33**		**95%**

Process Economics

Capital Costs: $97, 000
- Vessels
- Pumps
- Instrumentation

Manufacturing Costs: $76.00 per batch
- Enzymes
- Utilities
- Pretreatment

Current Ethanol Market Price: $2.15 per gallon

Pilot Plant Layout

The future 5000 square foot starch to ethanol pilot plant is set to be constructed behind the Animal and Poultry Waste Management Center. The pilot plant will house both the upstream and downstream portions of the process. The upstream will consist of the slurry tank, jet cooker, liquefaction reactor, saccharification reactor, and glucose storage tank.

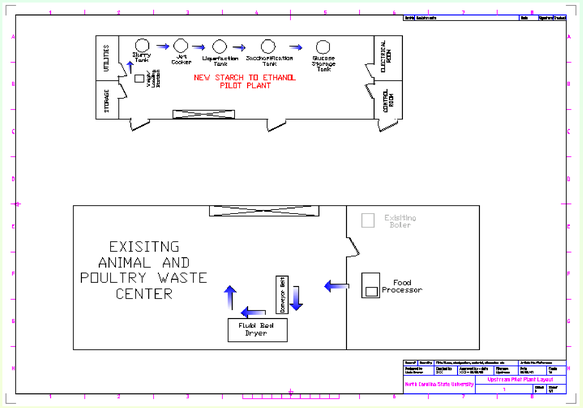

Conclusions

Process:
- Converts 10 lbs per hr sweetpotatoes to ethanol
- Three step enzyme addition: jet-cooking, liquefaction, and saccharification
- 95% overall conversion of starch to glucose

Results:
- 2.84 gallons of ethanol produced per batch
- Equates to $6.11 of revenue if sold
- Pilot plant loses money at a rate of $69.40 per batch

Recommendations

The next step in the design of the facility is to combine the results and process recommendations from the upstream and downstream portions of the facility.

For the combined process, further investigate continuous versus batch operation. Preliminary investigation resulted in reduced equipment costs, process times, and the amount of energy required. The continuous operation also allows for the possibility of simultaneous saccharification and fermentation step (SSF), which is typical in industrial corn to ethanol processes.